KYODO®

VAV TERMINAL UNIT

KYODO-ALLIED TECHNOLOGY PTE LTD

ISO 9001 REGISTERED
DNV
UKAS MANAGEMENT SYSTEMS
013
DNV Certification B.V.

VARIABLE AIR VOLUME TERMINAL UNIT

MODEL: KYODO / KYODO-R

INTRODUCTION

The variable air volume (VAV) system is applicable to most buildings in which an all-air type of air conditioning system may be successfully applied. The objective of heating, ventilating and air conditioning (HVAC) systems is to satisfy users when it comes to health, indoor air quality (IAQ), and thermal comfort. Air conditioning systems employed to provide thermal comfort and indoor air quality consume a significant part of the building energy requirement. Compared with other all air systems, such as double duct & multi-zone, the variable air volume system offers inherent savings in both installation and operating costs. A variable air volume (VAV) system enables 14 % to 20 % energy savings in the chiller and 20 % to 48 % for the fan system.

APPLICATION

Variable air volume systems are widely used where individual zone control is desired, such as commercial buildings, hospitals and schools. Where simultaneous heating and cooling of different areas within a structure are required, the variable air volume system can be coupled with a supplementary heating system. This system may be simply a hot water coil or an electric radiation type for perimeter heating, and may be coupled with a sound attenuator, a multiple-outlet attenuator, a multiple-outlet octopus, etc. A variable air volume system can be installed in an existing high energy air system for system energy conservation.

VARIABLE AIR VOLUME SYSTEM

KYODO Variable Air Volume (VAV) terminal units have a volume flow rate controller for supplying air in a variable air volume system. These units are designed to control the airflow rate of conditioned air into an occupied space in response to a control signal from a thermostat or Building Automation System (BAS). They can be used in a stand alone system or interfaced with LonWorks, BACnet or **KYODO** AIBS® systems.

KYODO VAV terminal units consist of a casing with a circular inlet spigot, a rectangular outlet connection with integral noise reduction of fiberglass with black matt tissue, a damper blade for air volume control and a cross-flow differential pressure sensor for measuring air volume.

KYODO®

KYODO reserves the right to make changes without written notice. The actual product might differ from pictures shown. Drawings are not meant to show exact details of every aspects of the product.

KYODO VAV terminal units also incorporate control components (VAV controller actuator) which are factory fitted. The Kyodo in-house testing facility ensures that all boxes that leave the factory are calibrated and tested to match the individual controller. This allows the terminals to monitor the desired flow rate, as dictated by the thermostat or BMS, and compensate instantly for any changes in supply air pressure that might tend to alter the supply air volume. Hence, the net result is a pressure-independent, variable air-volume system.

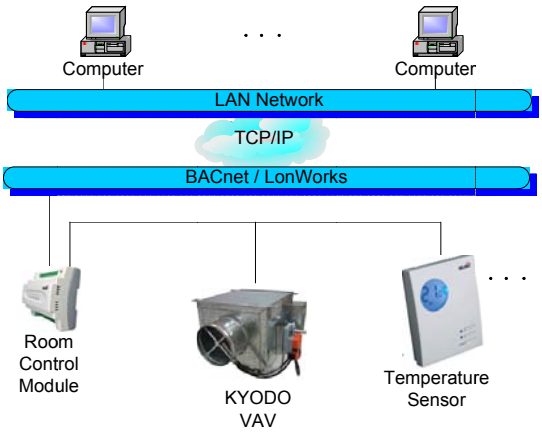

FEATURES

- Factory calibrated to suit project requirement.
- Round shape damper for better flow management.
- Multi-point averaging inlet differential pressure sensor.
- 25mm, 32 kg/m^3 fiberglass with black matt tissue internal insulation for noise reduction.
- Round inlet with beading for good inlet connection.
- Round damper shaft for better grip mounting of actuator.
- Bushing for low friction long life operation.
- Low pressure drop construction.
- Can be used for Constant Air Volume (CAV) application.
- Rectangular discharge opening with duct connection.
- Optional internal perforated sheet facing.
- Reheat coil available upon request.

KYODO VAV Control System

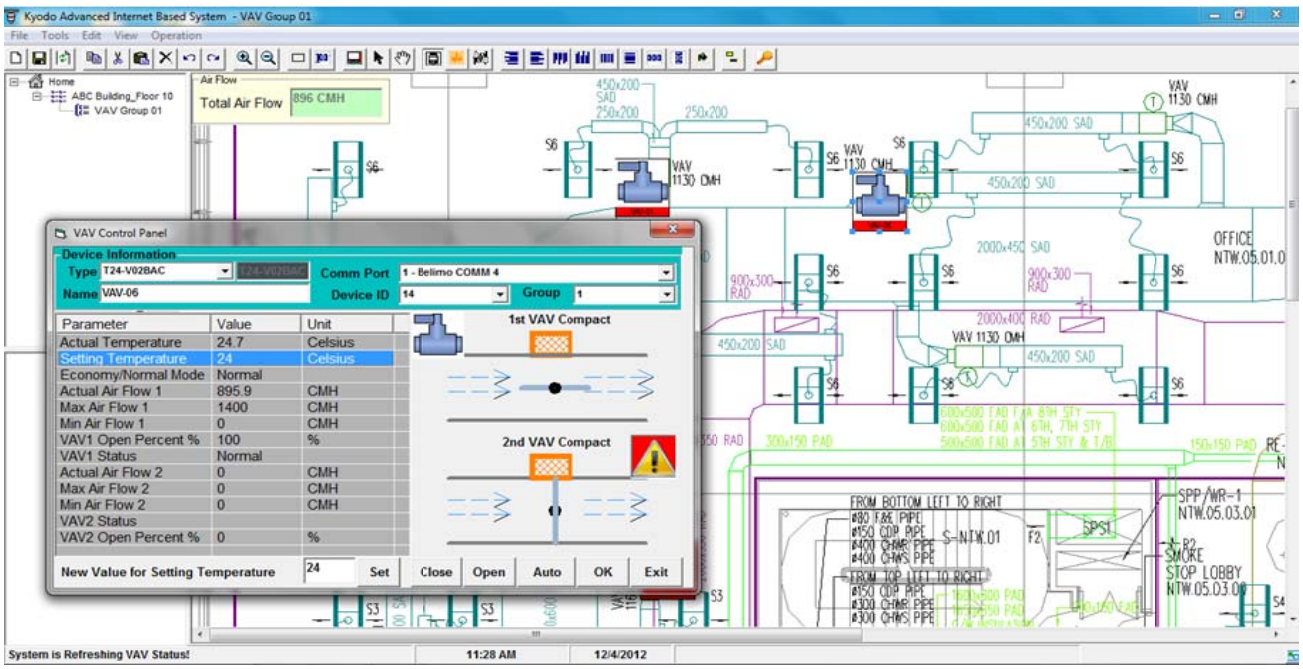

KYODO reserves the right to make changes without written notice. The actual product might differ from pictures shown. Drawings are not meant to show exact details of every aspects of the product.

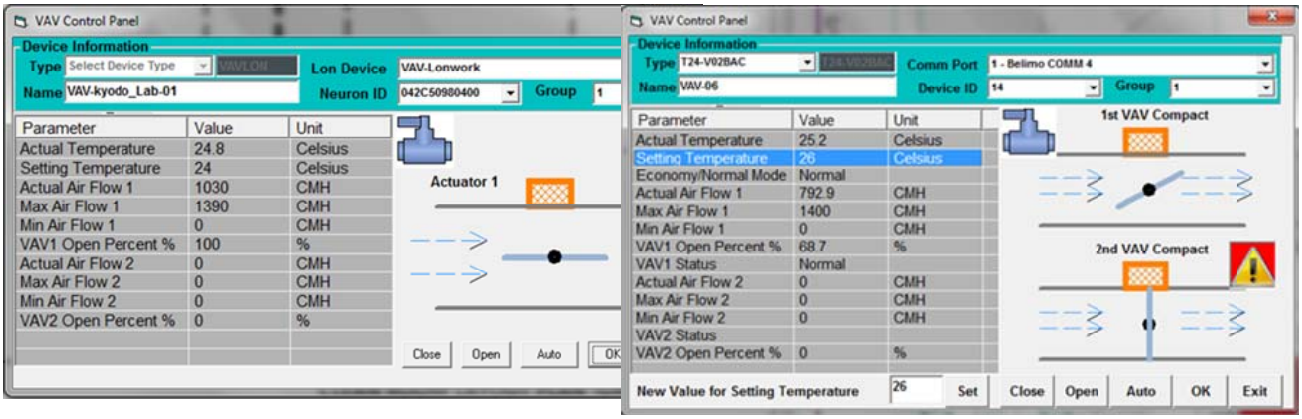

MATERIALS

- Casing : 0.7mm thickness galvanized steel.
- Blade : 1.2mm thickness galvanized steel.
- Internal insulation : 25mm, 32 kg/m^3 density fiber glass with matt black tissue facing.
- Bushing : Stainless Steel.
- Round shaft : Φ12.7 mm galvanized steel.
- Differential pressure sensor : Aluminum.

AIR VOLUME CONTROL TYPE

- **Variable Air Volume (VAV) Pressure Dependent Control**
  - Without differential pressure sensor.
  - Pressure dependent.
  - No monitoring of air volume.
- **Variable Air Volume (VAV) Pressure Independent Control**
  - With differential pressure sensor.
  - Pressure independent.
  - Air volume varies depending on design flow and signal by controller.
  - Air volume could be monitored.
- **Constant Air Volume (CAV) Pressure Independent Control**
  - With differential pressure sensor.
  - Pressure independent.
  - Air volume is constant (design flow) provided that the minimum static pressure is achieved.
  - Air volume could be monitored.

OPERATION

Each pressure independent **KYODO** VAV box is fitted with a velocity sensor, a flow controller/actuator, and a temperature controller. The air flow controllers/actuators operate with 24V a.c. 50/60 Hz or DC 24V power supply and, hence, each **KYODO** VAV box is provided with a step-down transformer.

KYODO®
KYODO reserves the right to make changes without written notice. The actual product might differ from pictures shown. Drawings are not meant to show exact details of every aspects of the product.

The flow controller/actuator receives two inputs, one from the airflow sensor and the other from the room temperature controller. The airflow sensor is installed within the airstream at the inlet of VAV box and will continuously monitor the quantity of air passing through the box and continuously provide a feedback signal to the flow controller/actuator. The room temperature controller continuously monitors the room temperature, compares it to the setpoint temperature and sends the required signal to the flow controller/actuator. The flow controller/actuator compares the two inputs and sends a control signal to the actuator that continuously modulates the VAV box damper to allow the required quantity of air through until the room setpoint temperature is obtained. The flow controller/actuator will immediately respond to any change in room temperature and fluctuation in duct pressure.

KYODO VAV boxes can be fully integrated into a DDC controller/LonWorks or BACnet system/**KYODO** AIBS® system/Fan optimizers system when equipped with the additional communication hardware.

OPERATING CONTROL SEQUENCE

1. Air flow is held constant in accordance with thermostat demand. Should there be any upstream duct pressure fluctuation, it will immediately be sensed by the air flow sensor which transmits the signal directly to the flow controller/actuator. The flow controller/actuator will transmit signals to the damper actuator to close or open the damper to compensate for the increase or decrease in the upstream duct pressure.
2. When the temperature controller senses a change in space temperature, it will transmit a reset signal to the flow controller/actuator, which will compare the reset signal with the signal received from the air flow sensor, and regulates the air volume control damper accordingly to supply the correct amount of air to maintain space temperature within the setpoint of temperature controller.
3. The proportional band of the temperature controller is fixed at 0.5K of setpoint temperature. At the space temperature of 0.5K above the thermostat setpoint, the air flow through the VAV box will be maintained at a pre-selected maximum setting and at the space temperature of 0.5K below the thermostat setpoint, the air flow through the VAV box will be maintained at a pre-selected minimum setting.

INSTALLATION

All **KYODO** VAV/CAV boxes are finished with standard hanger brackets for installation by either steel wire or threaded rods.

KYODO®

KYODO reserves the right to make changes without written notice. The actual product might differ from pictures shown. Drawings are not meant to show exact details of every aspects of the product.

1. Units are to be supported in a horizontal and level position. For convenience, it is suggested that the units be installed prior to installation of the ceiling tile grid system.
2. Turbulent flow approaching the terminal will create additional noise, pressure drop and greater air flow variation. Avoid abrupt transitions or duct turns at the inlet of the unit.
3. A minimum of three duct diameters of straight duct upstream of inlet differential pressure sensor is recommended.

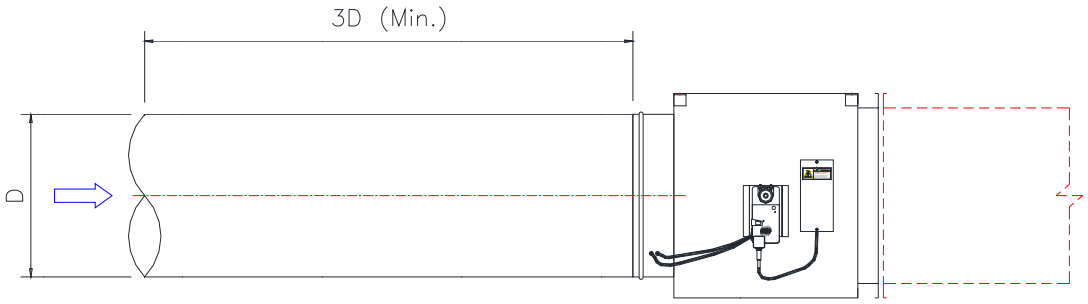

4. Close coupling the terminal unit inlet to the side of the main duct is **NOT** recommended.

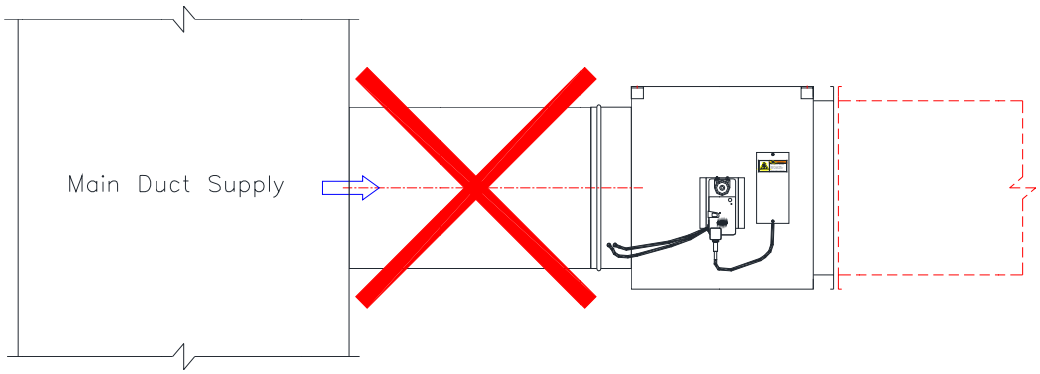

5. The diameter of the inlet duct must be equal to the listed inlet collar diameter of the terminal unit.
6. All control enclosures require adequate clearance to allow for field adjustments and service.
7. Outlet duct or attenuators are field mounted with slip and drive cleats provided by others.
8. Sealing of duct work to preclude air leaks should be done in accordance with the job specifications.
9. It is recommended that flexible ductwork connected to the inlet be secured using compression band. Rigid duct should be slipped over the inlet, secured in place with sheet metal screws, and sealed in accordance with the job specifications.

KYODO®
KYODO reserves the right to make changes without written notice. The actual product might differ from pictures shown. Drawings are not meant to show exact details of every aspects of the product.

DIMENSION AND TECHNICAL DATA

Model: KYODO

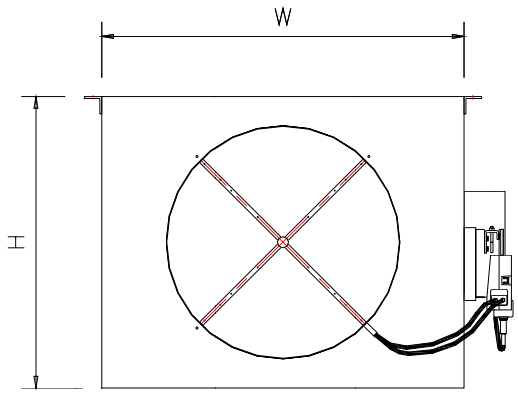

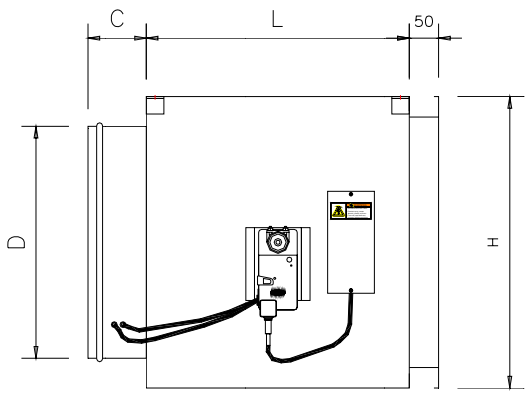

Model: KYODO-R

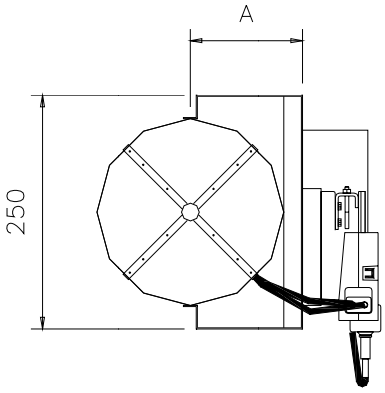

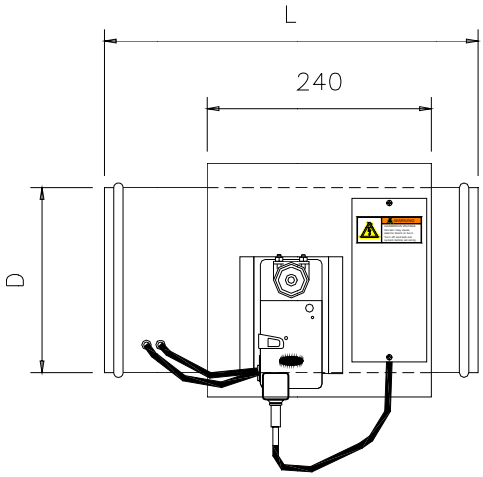

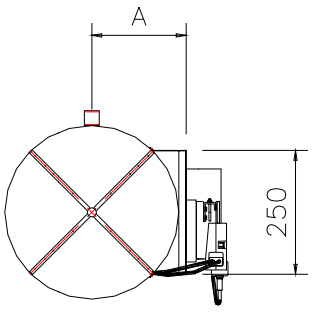

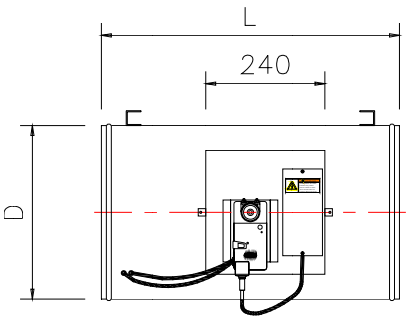

KYODO reserves the right to make changes without written notice. The actual product might differ from pictures shown. Drawings are not meant to show exact details of every aspects of the product.

Dimension (mm)

Model	D	W	H	L	C	Weight (kg)
KYODO-15	**Φ150**	300	250	300	100	8
KYODO-20	**Φ200**	320	300	330	100	10
KYODO-25	**Φ250**	360	320	350	100	11
KYODO-30	**Φ300**	460	400	380	100	13
KYODO-35	**Φ350**	520	500	400	100	17
KYODO-40	**Φ400**	620	500	450	100	20

Model	D	A	L	Weight (kg)
KYODO-R-15	**Φ150**	90	400	6
KYODO-R-20	**Φ200**	115	400	7
KYODO-R-25	**Φ250**	140	500	8
KYODO-R-30	**Φ300**	165	500	9
KYODO-R-35	**Φ350**	190	600	11
KYODO-R-40	**Φ400**	215	600	13

- Internal insulation 25mm, 32 kg/m^3 density coated to prevent air erosion (Model: KYODO).
- Galvanized steel housing.
- Rectangular discharge opening (Model: KYODO).
- Turbulent flow approaching the terminal will create additional noise, pressure drop and greater air flow variation. It is therefore recommended for optimum performance there should be a minimum of 3 duct diameters of straight inlet duct, the same size as the inlet, between the inlet and any transition, take off or fitting.

Air Volume Ranges

Model	Size (mm)	Air Volume Range	
		Min. CMH	Max. CMH
KYODO-15	**Φ150**	105	800
KYODO-20	**Φ200**	185	1400
KYODO-25	**Φ250**	305	2400
KYODO-30	**Φ300**	455	3500
KYODO-35	**Φ350**	680	5500
KYODO-40	**Φ400**	965	7000

Model	Size (mm)	Air Volume Range	
		Min. CMH	Max. CMH
KYODO-R-15	**Φ150**	105	800
KYODO-R-20	**Φ200**	185	1400
KYODO-R-25	**Φ250**	305	2400
KYODO-R-30	**Φ300**	455	3500
KYODO-R-35	**Φ350**	680	5500
KYODO-R-40	**Φ400**	965	7000

Model	Neck Velocity (m/s)	2.0	3.0	4.0	5.0	6.0	8.0	10.0	12.0	----
KYODO-(R)-15	Air Volume (CMH)	130	190	250	320	380	510	640	760	800
	S.P. (Pa)	6	9	12	16	20	32	50	59	61
KYODO-(R)-20	Air Volume (CMH)	230	340	450	570	680	900	1130	1350	1400
	S.P. (Pa)	5	9	11	16	19	30	48	57	60
KYODO-(R)-25	Air Volume (CMH)	350	530	710	880	1060	1410	1770	2120	2400
	S.P. (Pa)	5	8	10	15	18	28	47	55	63
KYODO-(R)-30	Air Volume (CMH)	510	760	1020	1270	1530	2040	2540	3050	3500
	S.P. (Pa)	5	7	11	15	18	26	45	55	64
KYODO-(R)-35	Air Volume (CMH)	690	1040	1390	1730	2080	2770	3460	4150	5500
	S.P. (Pa)	4	7	10	14	17	25	42	52	71
KYODO-(R)-40	Air Volume (CMH)	900	1360	1810	2260	2710	3620	4520	5420	7000
	S.P. (Pa)	5	8	12	16	18	28	41	50	70

* S.P. - Static Pressure drops are in Pascals. All data has been generated in which damper blade is fully open.

KYODO®

KYODO reserves the right to make changes without written notice. The actual product might differ from pictures shown. Drawings are not meant to show exact details of every aspects of the product.

Discharge Sound Power (dB)

Model: KYODO

Size (mm)	Air Volume (CMH)	Sound Power Level (dB)											
		@ 125 Pa ΔPs (0.5" w.g.) Octave Band (Hz)						@ 250Pa ΔPs (1.0" w.g.) Octave Band (Hz)					
		125	250	500	1k	2k	4k	125	250	500	1k	2k	4k
Φ 150	300	54	51	46	43	40	34	58	56	52	47	46	41
	400	56	53	48	46	43	36	60	58	54	50	48	43
	500	59	56	53	48	45	39	62	61	57	54	51	46
	600	60	58	54	51	47	40	64	62	60	56	52	48
	700	62	60	56	53	48	42	65	65	61	57	53	50
	800	64	62	57	54	49	45	66	67	63	59	54	52
Φ 200	400	54	50	46	42	41	35	58	54	53	46	44	42
	600	60	54	50	47	44	39	64	60	54	49	48	45
	800	62	56	52	49	46	42	66	63	56	52	50	48
	1000	64	60	54	52	48	44	68	65	59	55	52	50
	1200	66	62	56	54	49	45	69	68	60	56	53	51
	1400	67	64	58	55	50	48	70	70	62	58	54	52
Φ 250	600	54	51	45	43	42	36	60	58	53	48	47	42
	900	58	55	49	47	46	40	63	61	57	55	52	46
	1200	60	57	55	53	47	42	66	63	59	57	54	48
	1600	66	60	58	56	50	45	70	68	63	60	56	52
	2000	68	63	59	57	51	47	72	69	64	61	58	53
	2400	70	65	62	59	53	50	73	72	66	63	58	54
Φ 300	1000	60	56	49	47	44	40	65	62	57	53	52	47
	1500	64	59	56	53	51	43	68	64	60	57	55	50
	2000	66	62	59	55	53	45	70	67	63	59	57	52
	2500	69	64	61	57	54	48	71	69	65	61	59	54
	3000	70	66	63	58	55	50	72	71	67	63	60	56
	3500	71	67	64	59	56	52	74	72	68	64	61	58
Φ 350	1500	62	58	55	52	50	41	68	63	59	56	54	49
	2500	66	60	58	53	51	44	70	65	61	58	55	52
	3500	69	64	61	57	53	48	71	69	63	60	58	54
	4200	70	65	63	58	54	50	72	69	65	62	60	56
	4800	71	66	64	58	55	51	73	71	67	63	61	58
	5500	71	67	64	59	56	54	74	72	68	64	62	59
Φ 400	2000	60	53	52	50	49	40	64	58	56	55	53	48
	3000	62	55	54	51	50	42	66	60	57	56	54	50
	4000	66	59	58	55	53	46	70	64	63	60	58	53
	5000	68	62	61	56	55	48	72	67	65	61	59	56
	6000	70	64	63	58	56	51	73	68	66	62	60	59
	7000	72	67	66	59	58	54	75	71	69	64	62	60

Note:

1. All sound data based upon tests conducted in accordance with ISO 3741:1999, ISO 3743-2:1994, ANSI / ASHRAE Standard 130-2008 (Methods of Testing Air Terminal Units).
2. All Sound power level, dB re: 10^{-12} watts.
3. ΔPs - is inlet static pressure minus discharge static pressure.

KYODO®

KYODO reserves the right to make changes without written notice. The actual product might differ from pictures shown. Drawings are not meant to show exact details of every aspects of the product.

Discharge Sound Power (dB)

Model: KYODO

Size (mm)	Air Volume (CMH)	Sound Power Level (dB)											
		@ 500 Pa ΔPs (2.0" w.g.) Octave Band (Hz)						@ 750Pa ΔPs (3.0" w.g.) Octave Band (Hz)					
		125	250	500	1k	2k	4k	125	250	500	1k	2k	4k
Φ 150	300	62	61	58	52	51	48	65	64	60	54	55	52
	400	65	64	60	54	53	50	66	67	63	56	57	54
	500	67	67	63	56	56	53	69	70	66	59	60	57
	600	68	69	65	60	58	54	70	72	68	62	61	58
	700	70	71	66	61	59	55	72	74	69	64	62	59
	800	71	73	68	63	60	57	74	75	71	65	63	61
Φ 200	400	60	62	56	50	47	46	65	64	58	52	53	50
	600	66	65	58	53	52	50	69	68	60	53	56	54
	800	68	67	60	54	55	52	70	71	63	56	57	56
	1000	69	70	63	56	57	54	71	73	66	59	58	58
	1200	70	73	64	59	58	56	74	76	67	61	60	59
	1400	72	75	66	60	59	58	75	78	68	62	61	60
Φ 250	600	64	68	66	51	50	48	67	71	69	62	54	52
	900	68	70	68	60	57	55	70	72	70	68	61	58
	1200	70	73	70	65	60	56	72	74	69	69	63	60
	1600	72	74	70	66	62	58	74	75	70	69	65	62
	2000	73	75	68	67	63	59	76	78	71	71	67	63
	2400	74	76	69	67	64	60	78	78	72	70	67	64
Φ 300	1000	68	65	60	56	56	54	72	69	64	58	59	58
	1500	71	70	64	61	60	56	74	72	66	64	63	60
	2000	73	72	66	64	62	60	76	76	69	66	65	64
	2500	74	74	68	66	64	61	77	78	72	68	67	65
	3000	75	76	70	67	65	62	78	79	74	70	68	66
	3500	76	77	72	68	66	64	79	80	75	70	69	67
Φ 350	1500	70	68	63	60	59	55	73	72	65	63	62	58
	2500	72	71	65	62	61	57	74	74	67	65	64	61
	3500	73	72	68	65	62	60	76	77	71	67	66	63
	4200	74	74	70	66	64	62	77	78	72	69	67	65
	4800	76	75	71	67	65	63	78	78	74	69	68	66
	5500	77	77	72	68	66	64	79	80	75	70	69	68
Φ 400	2000	67	64	60	59	58	54	70	64	61	62	60	58
	3000	69	66	63	61	59	56	72	66	62	64	62	60
	4000	72	69	65	64	62	59	75	70	68	67	64	62
	5000	74	71	68	66	64	61	77	73	70	68	65	64
	6000	76	72	70	67	65	62	78	75	71	69	67	65
	7000	78	75	72	68	67	65	81	77	74	71	70	68

Note:

1. All sound data based upon tests conducted in accordance with ISO 3741:1999, ISO 3743-2:1994, ANSI / ASHRAE Standard 130-2008 (Methods of Testing Air Terminal Units).
2. All Sound power level, dB re: 10^{-12} watts.
3. ΔPs - is inlet static pressure minus discharge static pressure.

KYODO®

KYODO reserves the right to make changes without written notice. The actual product might differ from pictures shown. Drawings are not meant to show exact details of every aspects of the product.

Radiated Sound Power (dB)

Model: KYODO

Size (mm)	Air Volume (CMH)	Sound Power Level (dB)											
		@ 125 Pa ΔPs (0.5" w.g.) Octave Band (Hz)						@ 250Pa ΔPs (1.0" w.g.) Octave Band (Hz)					
		125	250	500	1k	2k	4k	125	250	500	1k	2k	4k
Φ 150	300	52	44	35	29	27	22	54	48	40	32	31	27
	400	53	47	39	32	30	24	56	51	42	36	33	29
	500	54	49	40	34	32	27	58	54	45	39	36	32
	600	56	51	42	37	34	28	59	56	47	41	38	33
	700	57	53	44	39	35	30	60	58	49	42	39	34
	800	58	55	45	41	36	31	61	60	50	44	40	36
Φ 200	400	45	40	35	30	26	22	48	44	41	34	32	27
	600	48	43	38	33	30	24	50	47	43	37	34	29
	800	50	46	41	36	34	28	54	49	46	40	40	35
	1000	51	48	44	39	36	30	56	52	49	43	42	36
	1200	53	51	45	42	40	32	59	56	50	45	44	38
	1400	57	54	48	43	40	34	61	58	52	47	46	40
Φ 250	600	46	45	40	36	32	23	52	46	43	41	38	31
	900	49	46	42	40	36	25	57	54	48	45	43	32
	1200	56	48	45	42	38	27	61	55	52	48	45	34
	1600	60	50	47	45	43	30	63	58	54	51	48	38
	2000	62	52	48	47	45	32	66	59	54	53	50	40
	2400	63	54	50	48	46	34	67	60	55	54	51	44
Φ 300	1000	48	43	39	32	30	27	53	50	46	38	34	29
	1500	53	47	43	37	33	28	58	52	50	44	38	31
	2000	56	50	46	41	36	30	60	55	52	47	43	34
	2500	60	53	49	41	39	32	63	58	53	49	45	38
	3000	61	55	51	43	41	35	65	60	56	49	48	40
	3500	63	56	52	45	43	35	67	61	57	51	49	43
Φ 350	1500	49	46	39	35	30	29	54	52	44	40	38	35
	2500	53	49	42	43	37	32	58	56	47	44	42	38
	3500	56	54	46	45	40	36	60	57	49	46	43	40
	4200	59	55	48	46	41	38	64	60	53	51	46	42
	4800	61	56	48	47	42	39	65	61	54	51	48	43
	5500	63	57	50	47	44	40	67	62	55	52	49	44
Φ 400	2000	50	45	39	37	35	28	54	49	43	38	36	34
	3000	52	46	41	39	37	30	56	50	45	43	41	35
	4000	56	51	44	43	41	33	60	56	48	47	46	38
	5000	58	53	47	44	42	34	62	59	52	48	47	40
	6000	61	56	50	46	44	36	65	62	53	50	49	42
	7000	63	59	54	48	46	39	68	66	55	52	51	45

Note:

1. All sound data based upon tests conducted in accordance with ISO 3741:1999, ISO 3743-2:1994, ANSI / ASHRAE Standard 130-2008 (Methods of Testing Air Terminal Units).
2. All Sound power level, dB re: 10^{-12} watts.
3. ΔPs - is inlet static pressure minus discharge static pressure.

KYODO®

KYODO reserves the right to make changes without written notice. The actual product might differ from pictures shown. Drawings are not meant to show exact details of every aspects of the product.

Radiated Sound Power (dB)

Model: KYODO

Size (mm)	Air Volume (CMH)	Sound Power Level (dB)											
		@ 500 Pa ΔPs (2.0" w.g.) Octave Band (Hz)						@ 750Pa ΔPs (3.0" w.g.) Octave Band (Hz)					
		125	250	500	1k	2k	4k	125	250	500	1k	2k	4k
Φ 150	300	55	51	45	39	36	33	57	55	48	41	39	38
	400	57	55	48	42	38	35	59	58	50	42	40	39
	500	59	58	50	42	41	36	62	61	53	44	43	40
	600	60	60	53	44	42	38	63	61	55	46	44	42
	700	63	62	53	46	43	39	65	63	56	48	46	42
	800	64	62	56	47	45	40	67	64	59	51	47	43
Φ 200	400	52	49	48	40	40	36	56	55	49	42	40	40
	600	55	53	49	42	41	38	58	57	51	45	44	43
	800	56	54	52	45	43	39	59	58	55	47	47	46
	1000	59	57	54	47	46	42	62	60	57	50	49	46
	1200	61	60	56	49	48	44	63	62	59	51	51	48
	1400	63	63	58	51	50	45	66	64	60	53	51	49
Φ 250	600	56	56	52	48	44	38	60	58	54	48	45	43
	900	60	61	56	52	48	40	64	62	60	56	52	44
	1200	64	61	58	54	52	42	66	65	61	57	55	46
	1600	67	63	59	56	55	45	68	67	63	59	56	49
	2000	69	65	60	58	57	48	71	69	64	61	58	51
	2400	70	68	61	59	58	49	72	70	66	62	60	53
Φ 300	1000	57	54	50	46	41	35	59	59	56	51	46	39
	1500	60	58	55	49	45	38	63	61	59	54	49	40
	2000	64	61	58	52	48	40	66	64	61	57	52	44
	2500	67	63	60	55	52	44	69	66	64	58	55	49
	3000	69	65	61	56	54	46	71	69	66	60	57	51
	3500	72	68	61	57	55	48	74	70	67	61	58	52
Φ 350	1500	58	56	50	47	42	36	60	59	54	51	45	38
	2500	61	58	53	49	43	38	63	61	57	53	48	41
	3500	64	62	55	52	48	39	66	66	60	56	52	45
	4200	67	65	56	55	50	42	69	68	61	58	52	48
	4800	69	65	58	56	51	46	71	69	61	59	55	50
	5500	71	67	60	57	54	49	73	70	64	60	57	52
Φ 400	2000	58	55	48	45	45	39	62	58	51	48	47	44
	3000	60	57	50	47	46	41	63	60	52	49	49	46
	4000	64	61	54	51	49	45	67	64	56	53	51	48
	5000	66	63	56	52	50	46	69	66	58	54	53	50
	6000	68	65	57	53	53	48	71	67	60	56	55	52
	7000	72	69	59	56	55	51	74	70	62	58	58	54

Note:

1. All sound data based upon tests conducted in accordance with ISO 3741:1999, ISO 3743-2:1994, ANSI / ASHRAE Standard 130-2008 (Methods of Testing Air Terminal Units).
2. All Sound power level, dB re: 10^{-12} watts.
3. ΔPs - is inlet static pressure minus discharge static pressure.

KYODO®

KYODO reserves the right to make changes without written notice. The actual product might differ from pictures shown. Drawings are not meant to show exact details of every aspects of the product.

Sound Noise Criteria (NC)

Model: KYODO

Size (mm)	Air Volume (CMH)	Sound Noise Criteria (NC)							
		Discharge Inlet Pressure (ΔPs) Pa				Radiated Inlet Pressure (ΔPs) Pa			
		125 (0.5" w.g.)	250 (1.0" w.g.)	500 (2.0" w.g.)	750 (3.0" w.g.)	125 (0.5" w.g.)	250 (1.0" w.g.)	500 (2.0" w.g.)	750 (3.0" w.g.)
Φ 150	300	-	-	20	23	-	-	19	23
	400	-	16	21	27	-	19	23	27
	500	-	20	27	31	16	22	27	31
	600	-	21	28	32	19	24	30	31
	700	18	23	31	34	21	27	32	33
	800	20	25	33	35	23	30	33	34
Φ 200	400	-	-	21	23	-	-	22	23
	600	-	18	23	27	-	16	23	25
	800	-	21	25	31	-	20	26	30
	1000	18	23	30	33	18	23	29	32
	1200	19	25	32	35	19	24	31	34
	1400	21	28	34	37	22	27	33	35
Φ 250	600	-	-	27	31	-	16	26	29
	900	-	19	30	32	-	22	31	35
	1200	-	20	32	33	19	26	33	36
	1600	16	25	33	34	21	29	34	38
	2000	20	27	34	37	24	30	35	39
	2400	22	31	35	38	25	31	38	41
Φ 300	1000	-	20	23	28	-	20	24	31
	1500	-	21	28	31	16	24	30	34
	2000	19	24	31	35	20	26	33	36
	2500	21	27	33	37	23	28	35	39
	3000	23	30	35	38	25	31	36	41
	3500	24	31	36	39	26	32	38	43
Φ 350	1500	-	20	25	31	-	20	24	29
	2500	16	22	30	33	16	24	28	32
	3500	21	27	31	36	22	25	32	36
	4200	22	28	33	37	23	30	35	38
	4800	23	30	34	38	24	31	36	39
	5500	24	31	36	39	25	32	37	40
Φ 400	2000	-	-	21	22	-	16	23	27
	3000	-	16	23	24	-	19	25	30
	4000	-	21	27	28	19	24	31	34
	5000	19	24	30	32	21	28	33	36
	6000	21	25	31	34	24	32	35	37
	7000	24	31	34	36	29	36	38	40

Note:

1. " - " represents NC levels below NC15.
2. NC values are calculated using current Industry Standard AHRI (ARI) 885, 2008. Radiated sound attenuation values obtained from App E, Type 2 Mineral Fiber Insulation.
3. Where ΔPs is inlet static pressure minus discharge static pressure.

KYODO®

KYODO reserves the right to make changes without written notice. The actual product might differ from pictures shown. Drawings are not meant to show exact details of every aspects of the product.

Discharge Sound Power (dB)

Model: KYODO-R

Size (mm)	Air Volume (CMH)	Sound Power Level (dB)											
		@ 125 Pa ΔPs (0.5" w.g.) Octave Band (Hz)						@ 250Pa ΔPs (1.0" w.g.) Octave Band (Hz)					
		125	250	500	1k	2k	4k	125	250	500	1k	2k	4k
Φ 150	300	54	50	47	44	40	36	57	54	51	48	46	42
	400	57	53	49	46	42	38	61	58	54	51	50	44
	500	61	57	53	48	46	40	64	61	58	54	51	47
	600	63	59	54	52	46	42	65	61	61	56	52	49
	700	65	61	58	55	48	44	68	64	62	59	55	53
	800	69	64	60	60	52	47	71	68	65	62	57	53
Φ 200	400	53	51	48	42	42	38	58	55	52	48	45	44
	600	61	55	50	47	45	40	65	59	55	53	49	46
	800	64	58	52	50	47	44	68	64	58	55	50	49
	1000	65	62	53	51	50	46	69	65	59	57	54	52
	1200	68	64	58	54	51	48	70	68	62	59	56	52
	1400	70	67	60	55	52	49	73	71	65	62	58	54
Φ 250	600	54	51	46	43	42	38	59	54	53	47	46	42
	900	59	55	50	47	45	41	62	59	57	55	52	47
	1200	64	58	54	53	48	44	67	64	59	56	55	50
	1600	68	63	57	55	52	48	72	68	63	61	56	53
	2000	71	64	61	58	54	50	73	70	64	63	58	54
	2400	72	68	65	62	57	53	75	72	69	66	62	56
Φ 300	1000	59	56	52	49	44	42	65	61	58	52	51	48
	1500	65	61	58	54	51	44	68	64	62	57	56	50
	2000	67	63	59	56	53	46	70	66	63	58	57	53
	2500	71	65	62	58	54	50	73	69	66	61	59	56
	3000	73	68	65	61	55	52	74	71	67	63	60	58
	3500	74	70	65	65	58	54	75	72	68	67	63	59
Φ 350	1500	61	58	55	51	50	45	66	62	59	56	54	50
	2500	66	62	58	54	51	47	70	68	63	58	55	52
	3500	70	65	61	57	53	50	72	69	64	61	58	55
	4200	72	68	65	60	54	51	74	70	68	66	63	58
	4800	73	70	65	61	57	53	75	73	70	66	65	60
	5500	74	71	68	63	57	54	77	73	73	68	68	62
Φ 400	2000	59	53	51	48	48	43	64	59	55	53	50	48
	3000	62	56	54	53	52	45	67	61	57	56	54	50
	4000	68	63	60	55	54	47	71	66	64	60	60	55
	5000	71	67	65	60	54	50	74	69	65	62	60	60
	6000	73	70	65	64	60	53	75	70	68	66	63	60
	7000	74	72	70	65	63	56	77	71	69	66	65	62

Note:

1. All sound data based upon tests conducted in accordance with ISO 3741:1999, ISO 3743-2:1994, ANSI / ASHRAE Standard 130-2008 (Methods of Testing Air Terminal Units).
2. All Sound power level, dB re: 10^{-12} watts.
3. ΔPs - is inlet static pressure minus discharge static pressure.

KYODO®

KYODO reserves the right to make changes without written notice. The actual product might differ from pictures shown. Drawings are not meant to show exact details of every aspects of the product.

Discharge Sound Power (dB)

Model: KYODO-R

Size (mm)	Air Volume (CMH)	Sound Power Level (dB)											
		@ 500 Pa ΔPs (2.0" w.g.) Octave Band (Hz)						@ 750Pa ΔPs (3.0" w.g.) Octave Band (Hz)					
		125	250	500	1k	2k	4k	125	250	500	1k	2k	4k
Φ 150	300	61	59	57	53	52	46	64	62	60	56	54	51
	400	66	64	60	56	54	48	68	67	64	58	57	53
	500	68	67	64	59	56	50	70	69	66	60	60	54
	600	71	68	65	61	58	53	73	72	68	63	61	56
	700	72	71	67	61	59	55	75	74	70	64	62	58
	800	74	73	70	66	62	56	77	74	71	68	66	61
Φ 200	400	60	58	56	52	49	46	66	64	57	54	52	50
	600	66	63	58	52	52	50	69	66	60	56	55	55
	800	69	66	62	56	55	53	72	70	64	58	57	56
	1000	71	69	65	58	58	55	74	73	68	62	60	59
	1200	73	72	68	60	58	57	76	76	70	64	62	60
	1400	74	75	69	62	59	59	78	77	72	67	63	62
Φ 250	600	66	66	64	55	53	50	68	67	65	63	58	54
	900	69	68	67	60	56	55	72	70	66	63	61	59
	1200	72	70	68	65	61	58	75	73	69	68	64	61
	1600	73	72	70	67	63	60	76	75	71	69	65	62
	2000	75	75	72	69	65	61	77	76	74	71	65	65
	2400	75	76	73	70	65	63	79	77	74	72	67	66
Φ 300	1000	67	65	59	58	56	55	71	67	64	60	59	58
	1500	72	69	62	60	58	56	74	71	67	64	63	61
	2000	74	72	66	64	63	60	77	76	70	68	66	65
	2500	75	74	70	65	64	62	78	78	72	70	67	66
	3000	77	76	71	67	66	64	80	79	75	71	68	68
	3500	79	76	74	70	69	66	82	79	78	72	72	69
Φ 350	1500	69	68	64	62	58	54	73	70	65	64	62	58
	2500	73	71	66	62	62	58	75	75	69	66	64	62
	3500	75	73	68	66	62	61	78	77	73	67	67	65
	4200	77	73	70	68	65	63	81	79	75	70	69	67
	4800	79	76	71	68	67	65	84	80	76	72	72	69
	5500	82	78	75	72	68	68	85	82	79	76	75	72
Φ 400	2000	69	65	61	59	57	55	73	67	63	62	60	58
	3000	71	67	64	62	59	56	74	69	66	64	63	61
	4000	74	70	66	64	63	60	78	74	69	67	65	64
	5000	75	72	70	68	66	63	79	76	73	70	67	67
	6000	78	75	70	70	68	66	83	79	75	72	70	68
	7000	81	78	76	72	70	69	84	82	78	78	77	72

Note:

1. All sound data based upon tests conducted in accordance with ISO 3741:1999, ISO 3743-2:1994, ANSI / ASHRAE Standard 130-2008 (Methods of Testing Air Terminal Units).
2. All Sound power level, dB re: 10^{-12} watts.
3. ΔPs - is inlet static pressure minus discharge static pressure.

KYODO®

KYODO reserves the right to make changes without written notice. The actual product might differ from pictures shown. Drawings are not meant to show exact details of every aspects of the product.

Radiated Sound Power (dB)

Model: KYODO-R

Size (mm)	Air Volume (CMH)	Sound Power Level (dB)											
		@ 125 Pa ΔPs (0.5" w.g.) Octave Band (Hz)						@ 250Pa ΔPs (1.0" w.g.) Octave Band (Hz)					
		125	250	500	1k	2k	4k	125	250	500	1k	2k	4k
Φ 150	300	53	45	37	29	28	24	55	50	41	33	31	28
	400	54	48	39	32	30	28	57	53	44	37	34	32
	500	55	51	41	36	33	31	59	55	45	40	37	35
	600	56	53	45	40	38	34	60	57	48	43	40	38
	700	58	55	49	44	40	36	61	58	53	47	43	41
	800	59	56	51	48	44	42	62	60	58	52	49	46
Φ 200	400	45	42	36	32	27	24	48	45	41	36	32	28
	600	48	45	39	36	34	27	51	48	45	40	37	33
	800	51	46	43	40	37	31	54	50	46	43	40	38
	1000	52	50	47	41	38	35	58	55	53	49	46	40
	1200	55	53	48	46	44	40	59	57	55	52	49	44
	1400	58	56	51	49	47	46	63	58	57	54	51	49
Φ 250	600	47	45	40	38	36	24	52	48	45	42	39	31
	900	49	47	44	41	39	28	57	54	47	46	42	34
	1200	55	49	46	43	42	31	62	57	52	49	46	37
	1600	61	53	47	46	43	34	64	60	54	52	48	41
	2000	63	55	50	48	46	41	68	63	58	56	51	46
	2400	65	58	55	52	49	47	69	63	61	58	55	50
Φ 300	1000	49	46	41	38	35	28	55	50	47	42	39	30
	1500	55	49	45	39	37	31	58	53	50	46	40	33
	2000	58	52	48	43	38	34	62	57	53	47	42	37
	2500	61	55	49	45	42	37	65	59	55	49	46	42
	3000	63	58	53	49	45	42	66	62	59	54	50	46
	3500	64	61	57	53	49	47	69	65	63	58	55	51
Φ 350	1500	51	47	39	36	35	31	55	53	46	40	39	37
	2500	53	50	45	42	38	34	58	55	48	44	43	40
	3500	57	54	47	45	42	39	61	58	49	48	46	43
	4200	58	56	50	48	44	42	64	61	54	52	49	45
	4800	63	59	54	52	48	44	66	61	57	55	52	48
	5500	64	62	55	53	50	48	68	65	59	57	53	51
Φ 400	2000	50	46	38	37	35	28	55	48	44	41	37	35
	3000	52	48	42	41	38	32	58	53	47	44	42	38
	4000	57	52	46	45	42	35	61	58	52	48	48	42
	5000	60	55	50	48	46	40	64	61	56	52	50	46
	6000	63	59	54	50	47	42	67	65	57	55	54	49
	7000	65	62	55	54	49	49	69	67	62	58	57	54

Note:

1. All sound data based upon tests conducted in accordance with ISO 3741:1999, ISO 3743-2:1994, ANSI / ASHRAE Standard 130-2008 (Methods of Testing Air Terminal Units).
2. All Sound power level, dB re: 10^{-12} watts.
3. ΔPs - is inlet static pressure minus discharge static pressure.

KYODO®

KYODO reserves the right to make changes without written notice. The actual product might differ from pictures shown. Drawings are not meant to show exact details of every aspects of the product.

Radiated Sound Power (dB)

Model: KYODO-R

Size (mm)	Air Volume (CMH)	Sound Power Level (dB)											
		@ 500 Pa ΔPs (2.0" w.g.) Octave Band (Hz)						@ 750Pa ΔPs (3.0" w.g.) Octave Band (Hz)					
		125	250	500	1k	2k	4k	125	250	500	1k	2k	4k
Φ 150	300	56	52	46	40	37	34	58	55	49	42	40	38
	400	58	55	48	44	40	36	60	58	52	45	43	40
	500	60	58	51	45	43	38	63	61	54	46	44	42
	600	62	60	53	46	44	40	64	62	56	49	45	44
	700	64	62	55	47	46	44	66	65	60	53	49	47
	800	65	63	59	50	48	46	69	66	63	57	53	50
Φ 200	400	53	50	48	42	40	36	57	55	51	44	42	40
	600	56	54	52	44	42	40	60	58	54	46	44	44
	800	58	56	53	46	44	41	61	59	58	50	48	47
	1000	60	58	56	50	48	45	63	61	58	53	51	50
	1200	63	60	58	52	49	47	66	63	61	55	54	52
	1400	65	64	62	57	55	51	69	65	63	59	57	56
Φ 250	600	58	56	54	50	46	38	61	59	58	54	48	44
	900	61	61	57	53	48	42	65	64	61	58	54	46
	1200	64	63	60	57	54	46	68	68	64	61	57	50
	1600	68	65	62	58	57	49	71	68	65	63	57	53
	2000	70	67	65	60	60	52	73	69	67	66	62	56
	2400	72	68	66	63	62	55	75	72	68	66	64	60
Φ 300	1000	58	55	52	46	42	36	62	58	57	52	48	40
	1500	60	59	56	49	48	39	65	62	60	55	50	42
	2000	65	62	59	54	48	43	69	64	62	58	52	48
	2500	68	64	62	58	55	48	72	66	65	63	58	54
	3000	71	66	64	61	58	52	75	71	68	66	62	57
	3500	73	70	66	64	61	56	77	75	70	69	65	62
Φ 350	1500	59	57	52	48	42	35	63	60	55	51	48	39
	2500	62	59	54	52	46	39	65	64	59	57	53	43
	3500	65	63	57	55	50	42	69	66	62	60	56	49
	4200	68	66	60	56	52	46	73	70	66	64	59	53
	4800	70	68	65	59	56	51	75	73	69	66	64	56
	5500	72	68	66	63	59	55	78	74	71	69	66	62
Φ 400	2000	58	54	46	44	44	38	62	59	51	47	46	44
	3000	61	58	52	48	46	42	65	61	55	51	49	47
	4000	64	62	54	51	49	46	68	65	58	54	51	50
	5000	67	64	58	54	52	50	72	69	61	58	55	54
	6000	70	68	60	57	56	53	75	72	67	63	60	57
	7000	73	69	67	64	60	58	76	74	72	70	68	63

Note:

1. All sound data based upon tests conducted in accordance with ISO 3741:1999, ISO 3743-2:1994, ANSI / ASHRAE Standard 130-2008 (Methods of Testing Air Terminal Units).
2. All Sound power level, dB re: 10^{-12} watts.
3. ΔPs - is inlet static pressure minus discharge static pressure.

KYODO®

KYODO reserves the right to make changes without written notice. The actual product might differ from pictures shown. Drawings are not meant to show exact details of every aspects of the product.

Sound Noise Criteria (NC)

Model: KYODO-R

Size (mm)	Air Volume (CMH)	Sound Noise Criteria (NC)							
		Discharge Inlet Pressure (ΔPs) Pa				Radiated Inlet Pressure (ΔPs) Pa			
		125 (0.5" w.g.)	250 (1.0" w.g.)	500 (2.0" w.g.)	750 (3.0" w.g.)	125 (0.5" w.g.)	250 (1.0" w.g.)	500 (2.0" w.g.)	750 (3.0" w.g.)
Φ 150	300	-	-	18	23	-	18	20	23
	400	-	16	23	27	-	21	23	27
	500	-	20	27	30	19	23	27	31
	600	16	19	27	32	21	25	30	32
	700	19	23	31	34	23	28	32	35
	800	22	27	33	35	25	31	34	38
Φ 200	400	-	16	21	24	-	-	22	25
	600	-	17	23	27	-	19	26	29
	800	-	22	25	31	16	20	28	32
	1000	20	23	28	33	21	28	31	33
	1200	21	25	31	35	22	30	33	36
	1400	24	30	34	37	25	32	36	38
Φ 250	600	-	-	25	30	-	19	29	33
	900	-	17	27	31	18	22	32	36
	1200	-	21	29	33	20	26	35	39
	1600	20	25	32	34	23	30	37	40
	2000	21	28	34	36	25	33	40	43
	2400	25	31	35	38	30	36	41	44
Φ 300	1000	-	19	25	29	-	21	26	32
	1500	18	21	27	31	19	24	31	35
	2000	20	23	31	35	22	28	34	37
	2500	22	27	33	37	23	30	37	40
	3000	25	30	35	38	28	34	39	44
	3500	28	31	36	39	32	38	41	47
Φ 350	1500	-	19	25	31	-	21	26	30
	2500	19	25	30	33	19	25	29	34
	3500	22	27	32	36	22	27	33	37
	4200	25	28	33	37	24	31	36	41
	4800	28	31	35	39	29	32	39	45
	5500	30	32	37	42	32	35	41	47
Φ 400	2000	-	16	23	26	-	18	23	28
	3000	-	18	24	28	-	21	27	31
	4000	20	23	28	33	20	27	32	35
	5000	24	28	31	35	24	31	34	39
	6000	28	30	34	38	29	35	38	43
	7000	31	33	37	42	32	37	43	49

Note:

1. " - " represents NC levels below NC15.
2. NC values are calculated using current Industry Standard AHRI (ARI) 885, 2008. Radiated sound attenuation values obtained from App E, Type 2 Mineral Fiber Insulation.
3. Where ΔPs is inlet static pressure minus discharge static pressure.

KYODO®

KYODO reserves the right to make changes without written notice. The actual product might differ from pictures shown. Drawings are not meant to show exact details of every aspects of the product.

KYODO-ALLIED TECHNOLOGY PTE LTD

Sales Office and Factory:
8 Pandan Crescent #01-06, Singapore 128464
Tel: (65)6265-1311 Fax: (65)6265-8100
Website: www.kyodo.com.sg

KYODO-ALLIED (MALAYSIA) SDN. BHD.

K.L. Office:
Tel: (03)7958-7641 / 7958-7724
Fax: (03)7958-7614

J.B. Office:
Lot 854 Jalan Sengkang,
81000 Kulai, Johor, Malaysia
Tel: (07)6637-467-9 Fax: (07)6637-290

KYODO-ALLIED (THAILAND) CO., LTD.

Bangkok Office:
1475 Soi Ladprow 94 (Phanjamit), Ladprow Road,
Wongthonglang, Bangkok 10310, Thailand
Tel: (02)559-2790 / 559-2791
Fax: (02)559-2792

KYODO-ALLIED TRADING (SHANGHAI) CO., LTD.

Room 2509 Zhong Cheng Building,
No. 818 Dong Fang Road,
Shanghai Pudong 200122 China
Tel: (86)21-6360-7138 Fax: (86)21-6360-7137

KA(DP) MAR'13